"UNION" SERVICE SPECIFICATION

NUMBER 2336

UNION SWITCH & SIGNAL ..... SWISSVALE, PA.
DIVISION OF WESTINGHOUSE AIR BRAKE COMPANY

Model 15A Crossing Bell.

* * * * * * * * *

Mechanical Inspection of Completed Mechanism.

Before gong is assembled to mechanism frame, the adjustment by spacers at "A" Fig.1 between armature and clapper arm shall be arranged to insure that armature casting can be brought down firmly upon its stop H, allowing 1/64 inch to 1/32 inch lost motion between clapper arm "B" and its stop "C".

After assembling gong to mechanism, striking hammer "D" should be adjusted by bending clapper spring "E" to require between 1/16 inch and 1/8 inch deflection of spring to allow hammer "D" to engage with the gong "F". This adjustment is made with clapper arm "B" resting against stop "C".

Date: 5-8-31

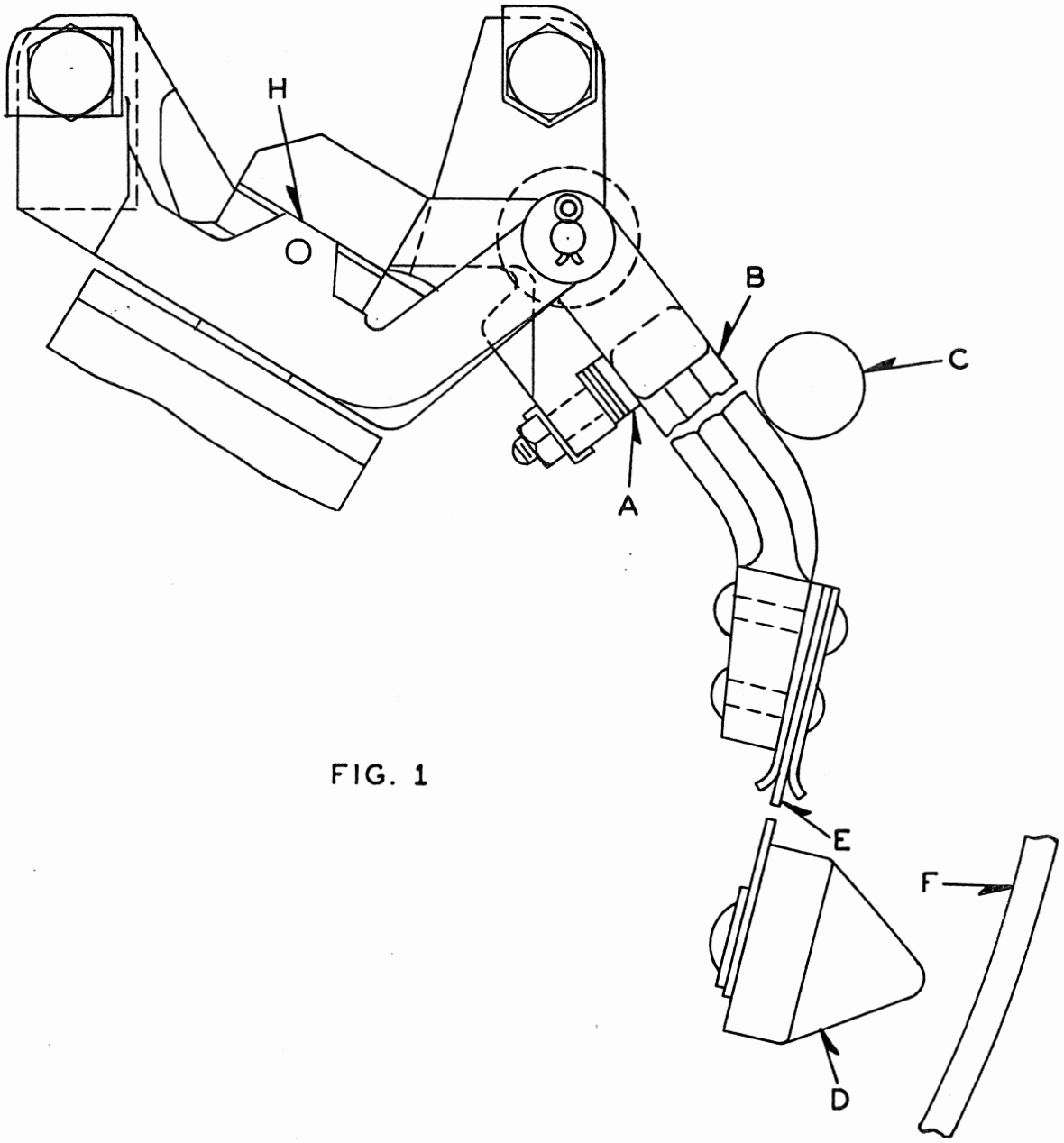

FIG. 1

Contact Adjustment

Circuit controller may be adjusted by shifting the left end of porcelain block. Do not bend springs until limits of this adjustment are exceeded.

Arcing tips M and N, Fig.2, are set so that service contacts P open at least 1/32 inch before MN is broken. Since tips MN take the arc, these are mounted so as to be conveniently removed and replaced without disturbing adjustment of service contacts P.

Care should be taken that M and N line up well. When badly burned these contacts may be cleaned by removing from controller and buffing with fine carborundum stone or cloth, after which carborundum dust should be removed from contacts. Care must be exercised in the adjustment of movable arcing tip that it has free play and that retaining spring holds it against contact finger and that tip of retaining spring bears at center of cup head.

Service contact P should be adjusted to give about 1/32 inch slide when fully compressed.

Controller should be adjusted so that arcing tips are open at least 1/16 inch when armature touches stop.

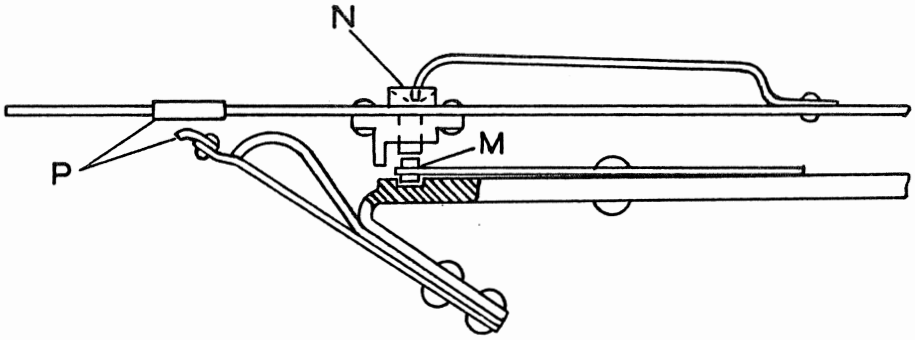

FIG. 2

Adjustment should be made with bell operating at its normal operating voltage given in Table I, and should give a loud clear regular ring of about 150 strokes per minute. Test should be made to insure that bell will operate with a clear ring without missing at the minimum voltage given in Table I.

Oil collecting on contacts interferes with their proper operation. Oil should, therefore, be used sparingly and only on bearings. Bearings of this bell are designed to resist corrosion and require little or no oil.

TABLE I

Resistance of Bell	Normal Operating Volts	Minimum Operating Volts
10 ohms	6.0	3.0
20 ohms	8.0	4.0
31 ohms	10.0	5.0

WRITTEN BY A. E. Dodd 5-13-31 APPROVED Gilson

CHECKED BY A. E. Dodd 5-13-31 DATE 5-16-31

noted
AWF
5-15-31

WABCO

SERVICE MANUAL 2336-B

MODEL 15-A DC GRADE CROSSING BELL FOR HIGHWAY CROSSING SIGNALS

* * * * * * * * *

PARTS LIST

This service manual provides parts lists for 8-, 10-, and 220-volt Model 15-A DC Grade Crossing Bell for Highway Crossing Signals. Included in this Parts List is a complete tabulation of the bells being covered, and detail parts for these bells. The bell tabulation contains a numeric reference, piece number, and operating voltage. The numeric "Ref." for the piece number shown in the bell tabulation is referenced in the detail parts list for determining the next higher assembly.

Information pertaining to the use of the detail parts list is provided at the beginning of the list.

PRINTED IN U.S.A. A0. 70-500-1486.1

WESTINGHOUSE AIR BRAKE COMPANY
SIGNAL & COMMUNICATIONS DIVISION
Swissvale Post Office, Pittsburgh, Pa. 15218
An American-Standard Company

May, 1970

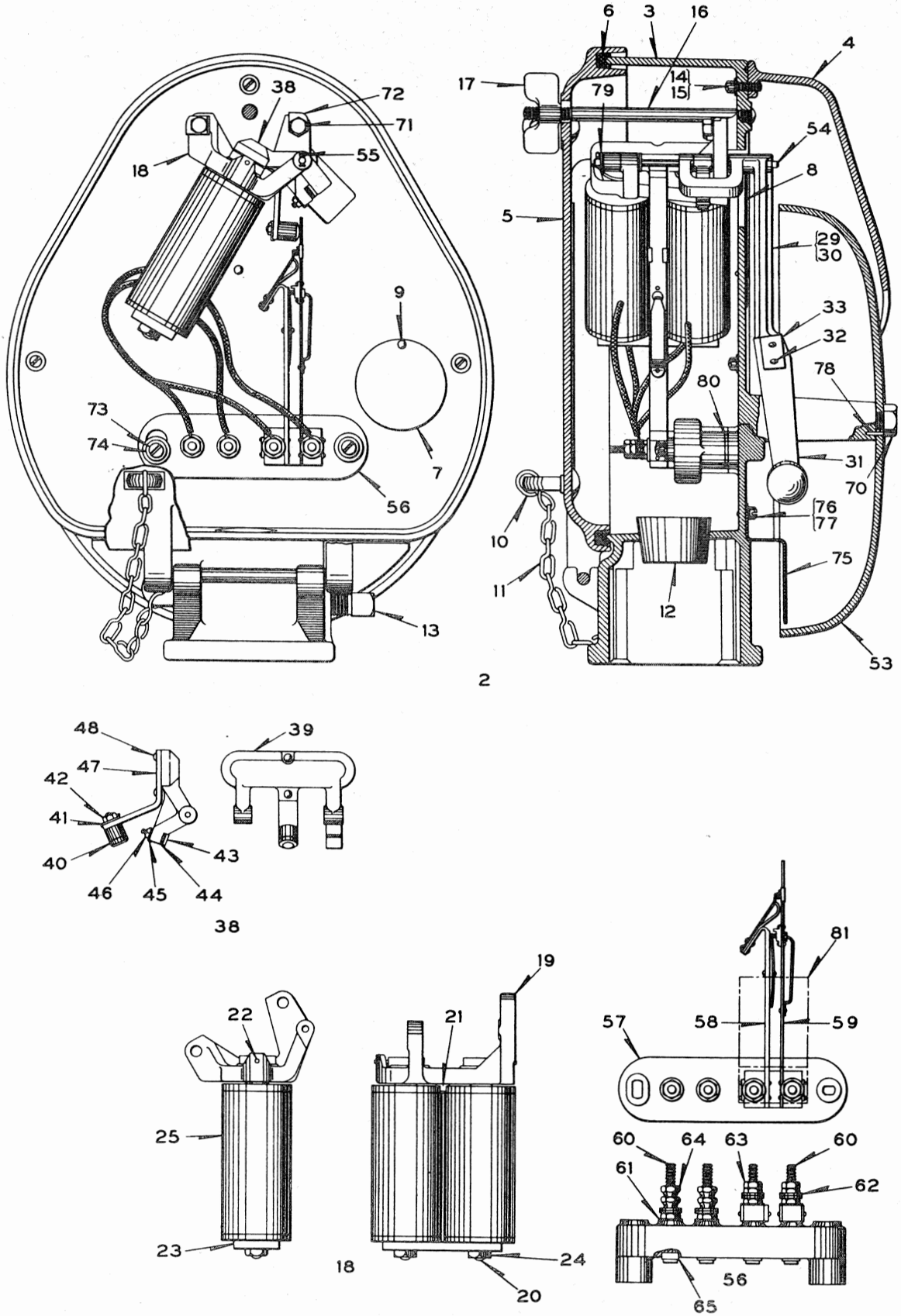

Figure 1. Model 15-A DC Grade Crossing Bell

MODEL 15-A DC GRADE CROSSING BELL FOR HIGHWAY CROSSING SIGNALS

Bell Tabulation

Model 15-A D.C. Crossing Bell, Complete		
Ref.	Piece	Operating Voltage
2	UN86181	8-Volts
2a	UN74357	10-Volts
*2b	UN171021	10-Volts
2c	UN79654	220-Volts

* Equipped with Capacitor for Radio interference elimination

Detail Parts List

Indented item descriptions indicate that the references, except 2, 2a, 2b, and 2c, in the "Used On" column refer to this parts list. These other references refer to Bell Tabulation.

Order By Reference, Piece, and Abbreviated Description

REF.	PIECE	DESCRIPTION	DRAWING	USED ON
3	UM136396	. Case	C8808-3	2 thru 2c
4	UM136397	. Hood	C8808-4	2 thru 2c
5	UM74355	. Cover Complete	C8808-1	2 thru 2c
6	UA67069	. . Gasket (Order should specify length desired)		5
7	UM61362	. Shield	C8808-2	2 thru 2c
8	UM61363	. Shield	C8808-2	2 thru 2c
9	UJ49827	. Rivet	10301-50	2 thru 2c
10	UJ56179	. No. 1S Hook, steel (Cad. Pl.)		2 thru 2c
11	UA61109	. No. 8, 6 Link Single Jack Chain (Cad. Pl.)		2 thru 2c
12	UM61928	. Wire Guide	C73301-1	2 thru 2c
13	UJ50598	. Set Screw, 5/8" - 11 x 1" cup point iron (Cad. Pl.)		2 thru 2c
14	UJ52202	. Machine Screw, 1/4" - 20 x 7/8" fil. hd. steel (Tin Pl.)		2a thru 2c
15	UJ47775	. Lock Washer, 1/4" plain steel (Tin Pl.)		2a thru 2c
16	UM61403	. Stud	8114-225	2a thru 2c
17	UM111526	. Wing Nut	8331-65	2a thru 2c
18	UN86180	. Magnet Bracket Assembly with Coils (Coils 20 Ohms Per Pair)	B12438-33	2

REF.	PIECE	DESCRIPTION	DRAWING	USED ON
18a	UN74363	. Magnet Bracket Assembly with Coils (Coils 31 Ohms Per Pair	B12438-33	2a, 2b
18b	UN79655	Magnet Bracket Assembly with Coils (Coils 5000 Ohms Per Pair)	B12438-33	2c
19	UN97308-001	. . Magnet Bracket Assembly (Without Coils)	B12438-33	18
19a	UM61376-001	. . . Magnet Bracket Only	8075-199	19
20	UM61378	. . . Core	8101-231	19
21	UM61375	. . . Stud	8750-1769	19
22	UM37163	. . . Pin	8097-279	19
23	UM61374	. . . Back Strap	8162-174	19
24	UM51610	. . . Nut	8265-161	19
25	UN86177	. . Coil, 10 Ohms	8133-312	18
25a	UN74358	. . Coil, 15.5 Ohms	8133-312	18a
25b	UN79656	. . Coil, 2500 Ohms	8133-312	18b
29	UN70198	. Clapper Arm Complete	C8808-2	2a thru 2c
30	UM61359	. . Clapper Arm only	C8808-2	29
31	UN74364	. . Clapper	C8808-2	29
32	UJ49434	. . Rivet, 3/16" x 3/4" rd. hd. iron		29
33	UM61379	. . Washer	7826-202	29
38	UN97406	. Armature Complete	C8808-2	2a thru 2c
39	UM61377	. . Armature Only	8157-256	38
40	UJ78039	. . Bushing	8095-527	38
41	UM79652	. . Nut Lock	8486-102	38
42	UM1515	. . Nut	8109-23	38
43	UM62306	. . Stud	8098-1200	38
44	UM62307	. . Washer	8486-197	38
45	UM62309	. . Nut Lock	8486-197	38
46	UM73494	. . Nut	8265-126	38
47	UM61360	. . Operating Arm	C8808-2	38
48	UJ49409	. . Rivet, 1/8" x 1/2" rd. hd. iron		38
53	UM63312	. Gong	B8379-4	2a thru 2c
54	UM61700	. Shaft	8097-719	2a thru 2c
55	UJ48601	. Cotter Pin, 1/16" x 3/8" steel (Tin Pl.)		2a thru 2c
56	UN70235	. Terminal Board with Contact Springs	9968-384	2a thru 2c
57	UM81427	. . Terminal Board Only	9968-381	56

REF.	PIECE	DESCRIPTION	DRAWING	USED ON
58	UN74362	. . Contact Spring	8385-1529	56
59	UN131429	. . Contact Spring	8385-1530	56
60	UM118271	. . Binding Post	8094-1192	56
61	UM29104	. . Washer	7828-138	56
62	UJ47818	. . Washer	7828-139	56
63	UM29103	. . Nut	8109-194	56
64	UM29101	. . Nut	8109-193	56
65	UM188259	. . Lock Washer	8486-310	56
70	UM40372	. Screw	C7377-2	2a thru 2c
71	UJ50037	. Cap Screw, 5/16" - 18 x 7/8" hex. hd. steel (Cad. Pl.)		2a thru 2c
72	UM21439	. Lock Washer	8486-70	2a thru 2c
73	UJ522076	. Machine Screw, 1/4" - 20 x 2-1/4" fil. hd. steel (Tin Pl.)		2a thru 2c
74	UM73099	. Washer (Tin Pl.)	7826-66	2a thru 2c
75	UM180652	. Shield	10914-498	2a thru 2c
76	UJ522019	. Machine Screw, No. 10-32 x 3/8" fil. hd. steel (Tin Pl.)		2a thru 2c
77	UJ47733	. Lock Washer, No. 10 plain steel		2a thru 2c
78	UM43654	. Pin	8097-448	2a thru 2c
79	UM53	. Washer	7828-5	2a thru 2c
80	UM170935	. Washer (cork)	8078-1499	2a thru 2c
81	UN190169	. Capacitor	B12549-29	2b
82	UN82254	Socket Complete (For mounting Bell on 4" pipe post) (Not shown)	C6041-10	2 thru 2c

WABCO

SERVICE MANUAL 2336-C

STYLE AH-10 AC GRADE CROSSING BELL
FOR HIGHWAY CROSSING SIGNALS

* * * * * * * * *

PARTS LIST

This service manual provides parts lists for Style AH-10 AC Grade Crossing Bell for Highway Crossing Signals. Information pertaining to the use of the detail parts list is provided at the beginning of the list.

PRINTED IN U.S.A. A0. 70-500-1484.1

WESTINGHOUSE AIR BRAKE COMPANY
SIGNAL & COMMUNICATIONS DIVISION
Swissvale Post Office, Pittsburgh, Pa. 15218
An American-Standard Company

May, 1970

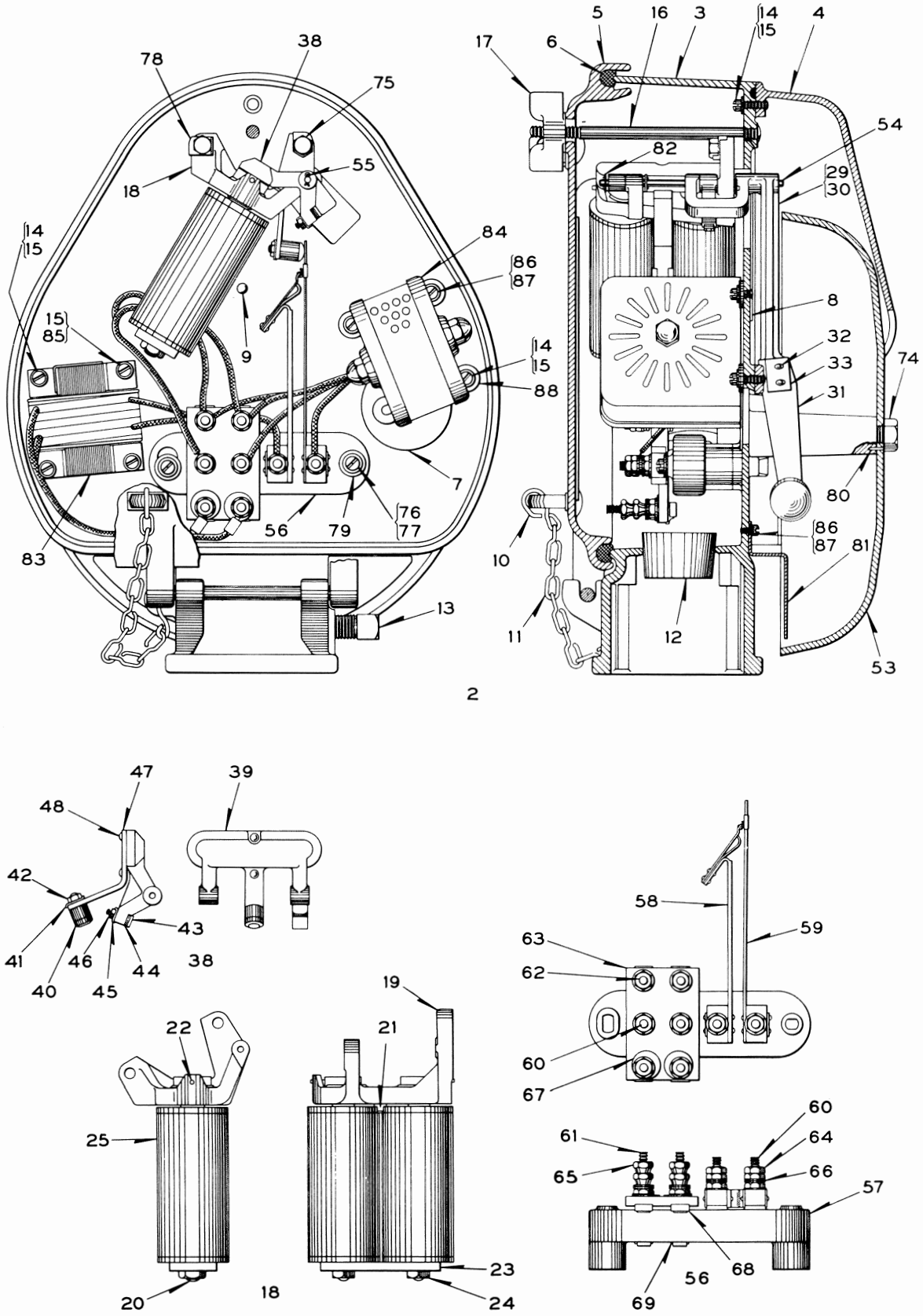

Figure 1. Style AH-10 AC Grade Crossing Bell

WABCO

STYLE AH-10 AC GRADE CROSSING BELL FOR HIGHWAY CROSSING SIGNALS

Detail Parts List

Crossing Bell Ref. 2 does not include Socket Ref. 89.

Indented item descriptions indicate that the references in the "Used On" column refer to this parts list.

Order By Reference, Piece, and Abbreviated Description

REF.	PIECE	DESCRIPTION	DRAWING	USED ON
2	UN152837	Style AH-10 A.C. Crossing Bell Complete, 110/100 volts, 25/100 cycles, (with coils 10 ohms per pair) . .	C8913-3	
3	UM152707	. Case.	C8808-3	2
4	UM136397	. Hood	C8808-4	2
5	UN74355	. Cover Complete	C8808-1	2
6	UA67069	. . Gasket (Order should specify length desired) . . .		5
7	UM61362	. Shield	C8808-2	2
8	UM61363	. Shield	C8808-2	2
9	UJ49827	. Rivet	10301-50	2
10	UJ56179	. Hook, No. 1S steel (Cad. Pl.)		2
11	UJ61109	. No. 8, 6 Link Single Jack Chain (Cad. Pl.)		2
12	UM61928	. Wire Guide	C7330-1	2
13	UJ50598	. Set Screw, 5/8" - 11 x 1" cup point iron (Cad. Pl.)		2
14	UJ52202	. Machine Screw, 1/4" - 20 x 7/8" fil. hd. steel (Tin. Pl.).		2
15	UJ47775	. Lock Washer, 1/4" plain steel (Tin Pl.)		2
16	UM61403	. Stud	8114-225	2
17	UM111526	. Wing Nut	8331-65	2
18	UN70234	. Magnet Bracket Assembly with Coils (Coils 10 ohms per pair)	B12438-33	2
19	UN97308-001	. . Magnet Bracket Assembly (Without coils)	B12438-33	18
19a	UM61376-001	. . . Magnet Bracket only	8075-199	19
20	UM61378	. . . Core	8101-231	19
21	UM61375	. . . Stud.	8750-1769	19
22	UM37163	. . . Pin.	8097-279	19
23	UM61374	. . . Back Strap	8162-174	19
24	UM51610	. . . Nut	8265-161	19

REF.	PIECE	DESCRIPTION	DRAWING	USED ON
25	UN74446	. . Coil, 5 Ohms	8133-312	18
29	UN70198	. Clapper Arm Complete	C8808-2	2
30	UM61359	. . Clapper Arm Only	C8808-2	29
31	UN74364	. . Clapper	C8808-2	29
32	UJ49434	. . Rivet, 3/16" x 3/4" rd. hd. iron		29
33	UM61379	. . Washer	7826-202	29
38	UN97406	. Armature Complete	C8808-2	2
39	UM61377	. . Armature Only	8157-256	38
40	UJ78039	. . Bushing	8095-527	38
41	UM79652	. . Nut Lock	8486-102	38
42	UM1515	. . Nut	8109-23	38
43	UM62306	. . Stud	8098-1200	38
44	UM62307	. . Washer	8486-197	38
45	UM62309	. . Nut Lock	8486-197	38
46	UM73494	. . Nut	8265-126	38
47	UM61360	. . Operating Arm	C8808-2	38
48	UJ49404	. . Rivet, 1/4" x 1/2" rd. hd. iron		38
53	UM63312	. Gong	B8379-4	2
54	UM61700	. Shaft	8097-719	2
55	UJ48601	. Cotter Pin, 1/16" x 3/8" steel (Tin Pl.)		2
56	UN152699	. Terminal Board with Contact Springs	9968-886	2
57	UM81427	. . Terminal Board Only	9968-381	56
58	UN153127	. . Contact Spring	8385-2173	56
59	UN153368	. . Contact Spring	8385-2172	56
60	UM113978	. . Binding Post	8094-1192	56
61	UM199852	. . Binding Post	8094-2207	56
62	UM122489	. . Binding Post	8094-1192	56
63	UM152698	. . Terminal Board	9968-887	56
64	UM29103	. . Nut	8109-194	56
65	UM29101	. . Nut	8109-193	56
66	UJ47818	. . Washer	7828-139	56
67	UJ75510-0005	. . Tag (Lettered A.C.)	8988-75	56
68	UM186420	. . Lock Washer	8486-362	56
69	UM188259	. . Lock Washer	8486-810	56
74	UM40372	. Screw	C7377-2	2

REF.	PIECE	DESCRIPTION	DRAWING	USED ON
75	UJ50037	. Cap Screw, 5/16" - 18 x 7/8" hex. hd. steel (Cad. Pl.)		2
76	UJ522076	. Machine Screw, 1/4" - 20 x 2-1/4" fil. hd. steel (Tin Pl.)		2
77	UM73099	. Washer (Tin. Pl.)	7826-66	2
78	UM21439	. Lock Washer	8486-70	2
79	UJ47034	. Washer (Leather)	8078-422	2
80	UM43654	. Pin	8097-448	2
81	UM180652	. Shield	10914-489	2
82	UM53	. Washer	7828-5	2
83	UN152621	. Style N2 Transformer, 110/100 Volts, 25/100 Cycles	C8605-17	2
84	UN152477	. Style R-27 Rectifier, Input 10 Volts, 25 to 100 Cycles A.C., Output 6 Volts D.C., 0.6 Amp. . . .	C9135-26	2
85	UJ52200	. Machine Screw, 1/4" - 20 x 1/2" fil. hd. steel (Tin Pl.)		2
86	UJ522019	. Machine Screw, No. 10-32 x 3/8" fil. hd. steel (Tin Pl.)		2
87	UJ47733	. Lock Washer, No. 10 plain steel (Tin Pl.)		2
88	UM50682	. Washer	7826-117	2
89	UN82254	Socket Complete (For mounting Bell on 4" pipe post) (Not shown)	C6041-10	

SERVICE MANUAL 6094

ALUMINUM DC CROSSING BELL
(WITH STEEL GONG)
MODEL BA-10

January, 1982
B-1/85-200-2168-3

UNION SWITCH & SIGNAL DIVISION
AMERICAN STANDARD INC. / SWISSVALE, PA 15218

PRINTED IN USA

REVISION INDEX

Revised pages of this manual are listed below by page number and date of revision.

Page Number	Date of Revision

CONTENTS

Section		Page
I	DESCRIPTION	2
	1.1 HOUSING	2
	1.2 MECHANISM	2
	1.3 BASE	2
II	APPLICATION	2
	2.1 POWER REQUIREMENT	2
	2.2 WIRING	2
III	MOUNTING AND ADJUSTMENT	3
	3.1 FOR 5 INCH MAST	3
	3.2 FOR 4 INCH MAST	3
	3.3 ADJUSTMENT	3
IV	MAINTENANCE	4
	4.1 CONTACTS	4
	4.2 SOLENOID	4
	4.3 CYCLIC CAPACITOR	4
V	PARTS LIST	4

I. DESCRIPTION

1.1 HOUSING

The Model BA-10 DC Crossing Bell consists of a 12 inch steel gong mounted on a round cast aluminum housing with rain hood and hinged aluminum cover. The cover can be secured by means of a padlock.

1.2 MECHANISM

The operating mechanism inside the housing consists of:

- Rotary solenoid
- Actuator
- Clapper
- Adjustable contacts
- Arc suppressor (capacitor and diode)
- Cyclic rate reducing capacitor

1.3 BASE

The base of the BA-10 is designed to mount on a 5 inch mast and on a 4 inch mast when a special adapter is used.

II. APPLICATION

2.1 POWER REQUIREMENT

A source of 10 volts (±25%) of direct current is required to operate the bell. When the bell is operated at 10 volts, the current will be 0.3 ampere.

2.2 WIRING

Connections are made to two terminals on an insulated terminal block. One terminal is labeled "B+" (battery positive) and the other is labeled "NEG" (battery negative). Polarity must be observed for proper operation. See Figure 1, BA-10 Wiring Diagram.

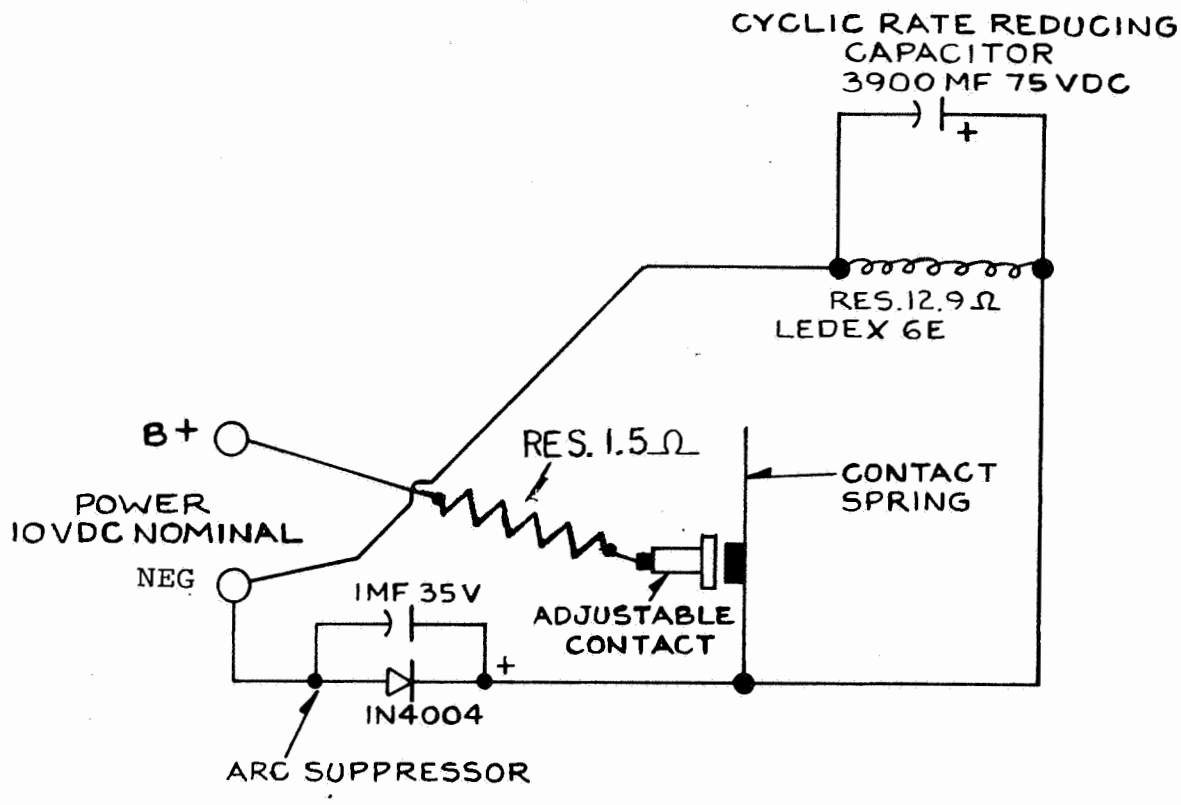

Figure 1. BA-10 Wiring Diagram

III. MOUNTING AND ADJUSTMENT

3.1 FOR 5 INCH MAST

The BA-10 will mount directly on a 5 inch mast without special adapters. A set screw (J050576) and jam nut (J048010) is provided.

3.2 FOR 4 INCH MAST

The BA-10 will mount on a 4 inch mast when a reducing adapter (M451543-0701) and set screw (J050578) are used. (This adapter and longer set screw are included when bell is ordered as X451542-0102).

3.3 ADJUSTMENT

Rotate actuator (Item 4) in Figure 2 until the contact spring comes to rest against the spring stop. Turn the adjustable contact so there is .015 gap between it and the spring contact.

Allow the actuator (Item 4) to return to its normal deenergized position. Apply 10VDC ± 1VDC power and check cyclic rate of the clapper (160 - 240/Min.). Move the adjustable contact in or out, as necessary to obtain the required rate and tighten nuts on the back side to lock the contact in position.

IV. MAINTENANCE

4.1 CONTACTS

A Check of the spring contact, adjustable contact, and gap should be made periodically to ensure proper operation. Excessive contact pitting may be due to a faulty arc suppression capacitor or diode. If adjustment is required, follow the procedure given in Section III.

4.2 SOLENOID

The rotary solenoid should energize when voltage is applied and the contacts are closed. Should bell fail to operate, check all wiring, connections, and solenoid coil continuity. Since the rotary solenoid is sealed against dirt and foreign materials, no provision is made for lubrication during its expected life. Should the bell be installed in a particularly dusty area, occasional cleaning of the torsion spring at the back of the solenoid should be performed. Use a spray type degreaser or cleaner followed by a sprayed on light oil. LPS#1 manufactured by LPS Research Laboratory, Los Angeles, Calif., or equivalent may be used.

Coil reistance is 12.9 ohms.

4.3 CAPACITOR

The cyclic rate reducing capacitor is necessary for limiting the rate of the clapper to approximately 180-190 strokes per minute.

4.4 GONG

The Gong surface may become hardened by the clapper head over a period of time. Rotation of the gong periodically is recommended. This period of rotation will be a function of the amount of traffic at the particular location and can only be determined under actual service conditions.

V. PARTS LIST

Figure 2, General Drawing of Model BA-10 DC Crossing Bell, includes a parts list with item numbers keyed to the drawing.

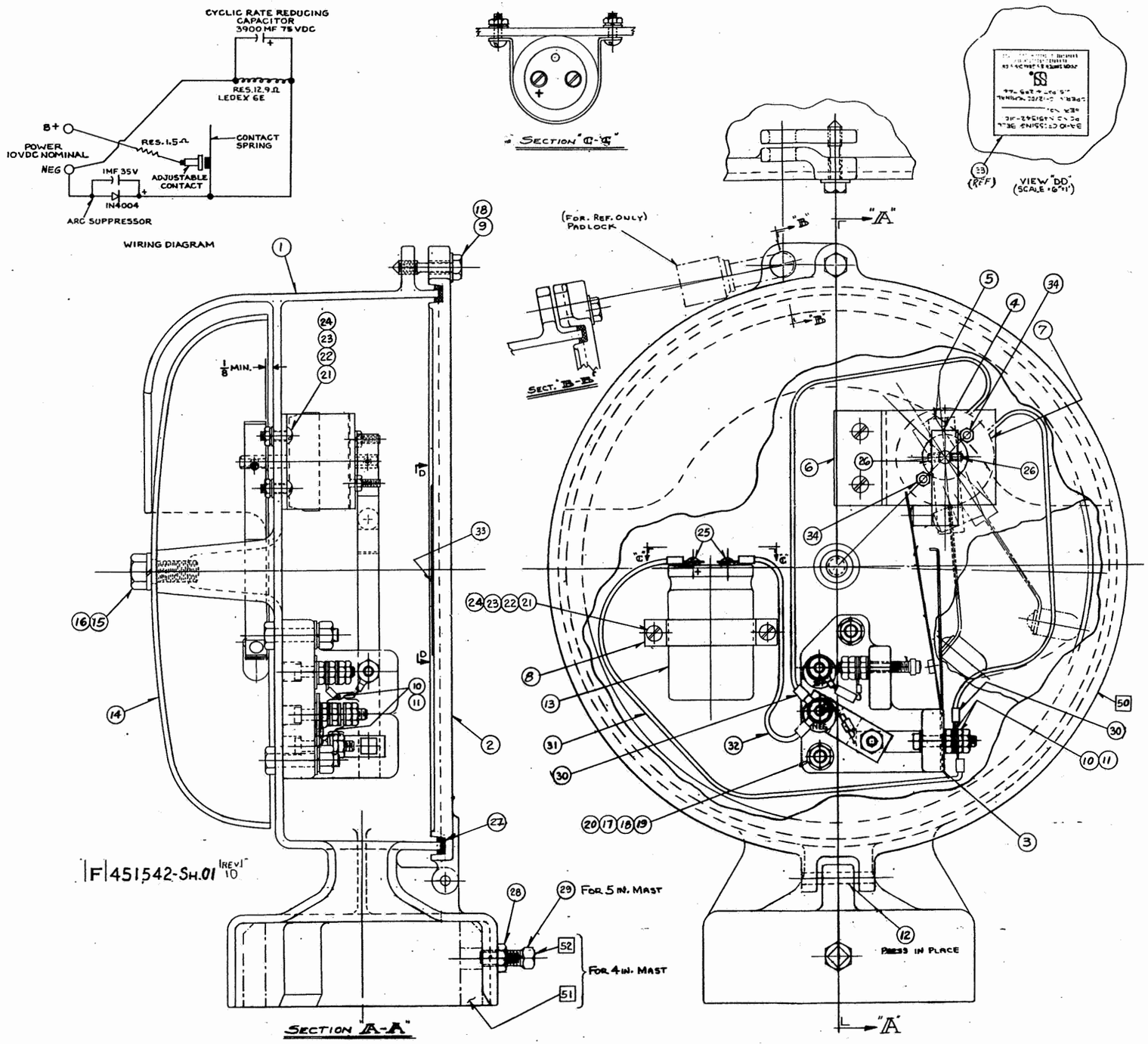

N451542-0101 (ITEMS SHOWN ○)
MODEL "BA-10" D.C. CROSSING BELL (FOR 5 IN. MAST)

ITEM NUMBER	GROUP U M	QUANTITY UNITS	QUANTITY DEC.	PART IDENTIFICATION T	NUMBER	SUFFIX	DESCRIPTION	DRAWING T	NUMBER	SHEET	SUB
1	I	1.	0	M	451543	0102	HOUSING, BELL	F	451543	01	
2	I	1.		M	451543	0202	COVER, BELL HOUSING	D	451543	02	
3	I	1.		N	451543	0601	BOARD, TERM. & CONTACT	C	451543	06	
4	I	1.		N	451543	0402	ACTUATOR	C	451543	04	
5	I	1.		N	451543	0401	CLAPPER	C	451543	04	
6	I	1.		M	451187	8601	BRACKET, MTG.	B	451187	86	
7	I	1.		J	725857	0101	SOLENOID, R.H. ROTARY	V	725857	01	
8	I	1.		M	451187	8701	CLAMP	B	451187	87	
9	I	1.		M	451488	0201	SCREW	B	451488	02	
10	I	7.		M	029103		NUT		8109	194	
11	I	8.		J	047818		WASHER		7828	139	
12	I	1.		J	487315		PIN, ROLL				
13	I	1.		J	709145	0284	CAPACITOR				
14	I	1.		M	063312		GONG, 12 IN. STD.	B	8379	4	
15	I	1.		J	050090		SCREW, 1/2-13 X 1 1/4 HEX. HD. CAD. PL.				
16	I	1.		J	047783		WASHER, 1/2 STL. LK. CAD. PL.				
17	I	2.		J	047526		WASHER, 5/16 STL. LK. CAD. PL.				
18	I	3.		J	047897		WASHER, 5/16 STL. PL. CAD. PL.				
19	I	2.		J	050042		SCREW, 5/16-18 X 1 1/2 HEX. HD. CAD. PL.				
20	I	2.		J	048006		NUT, 5/16-18 HEX. STL. CAD. PL.				
21	I	4.		J	523281	0112	SCREW, 10-32 X 3/4 RD. HD. STL. GALV	V	525281	01	
22	I	4.		J	475132	0110	WASHER, 10 STL. PL. GALV.	V	475132	01	
23	I	4.		J	475131	0109	WASHER, 10 STL. LK. GALV.	V	475131	01	
24	I	4.		J	480241	0105	NUT, 10-32 HEX. STL. GALV.	V	480241	01	
25	I	2.		J	051664		SCREW, 10-32 X 1/4 RD. HD. BR. NP				
26	I	2.		J	507363		SCR-10-32 X 1/4 AL HD NYLOC SET				
27	I	1.		J	470070		GASKET, RUBBER (3/16 X 3/8 X 45')				
28	I	1.		J	048010		NUT, 3/8-16 STL. JAM CAD. PL.				
29	I	1.		J	050576		SCREW, 3/8-16 X 1" SQ. HD. SET CAD. PL.				
30	I	2.		J	730041		TERMINAL, PRE INSUL		8064	975	
31	I	1.		N	438262		LEAD (13 INCH)	B	9990	15	
32	I	1.		N	438263		LEAD (7 INCH)	B	9990	15	
33	I	1.		M	451496	6301	PLATE, NAME	B	451496	63	
34		2.		J	047733		WASHER, #10 STL. LK.				
35		.									
36		.									
37		.									
38		.									
39		.									
40		.									
41		.									

X451542-0102 (ITEMS SHOWN □)
MODEL "BA-10" D.C. CROSSING BELL (FOR 4 IN. MAST)

ITEM NUMBER	GROUP U M	QUANTITY UNITS	QUANTITY DEC.	PART IDENTIFICATION T	NUMBER	SUFFIX	DESCRIPTION	DRAWING T	NUMBER	SHEET	SUB
50	I	1.	0	N	451542	0101	BELL, MODEL "BA10"	F	451542	01	
51	I	1.		J	793026		ADAPTER, REDUCING	C	451543	07	
52	I	1.		J	050578		SCREW, 3/8-16 X 1 1/2 SQ. HD. SET CAD. PL.				

Figure 2. General Drawing of Model BA-10 DC Crossing Bell